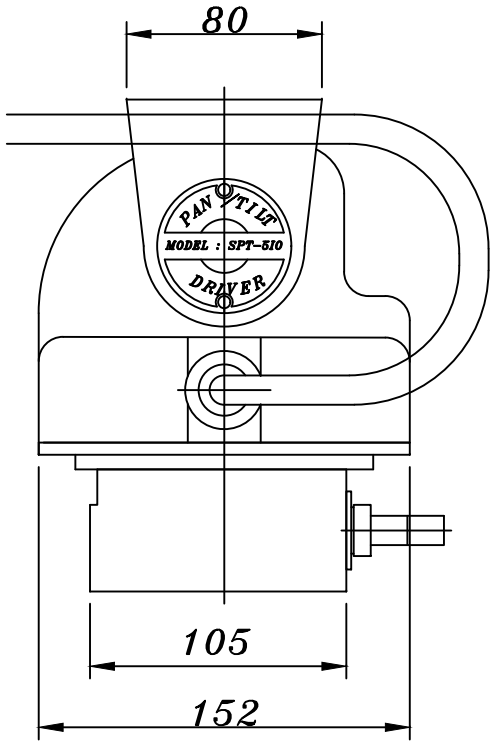

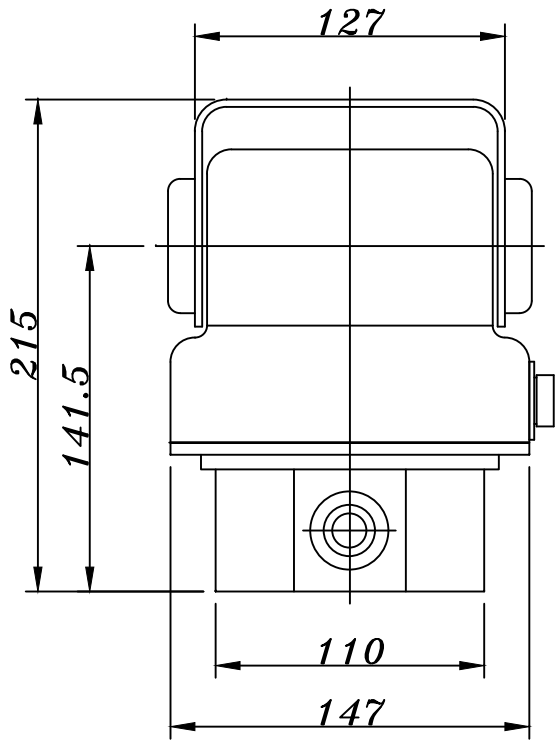

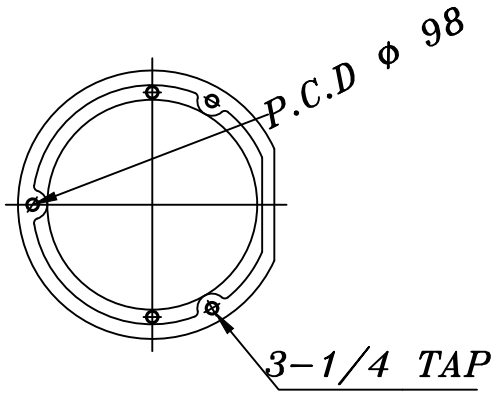

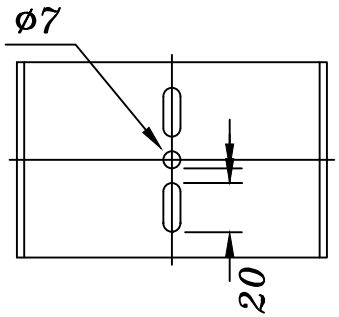

ITEM NO.	DWG TITLE.
SPT-5IO	PAN/TILT DRIVER
	SHINWOOTECH.,LTD